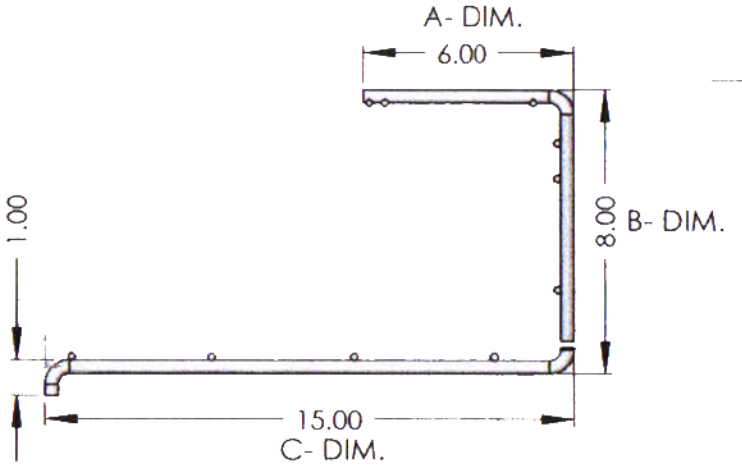

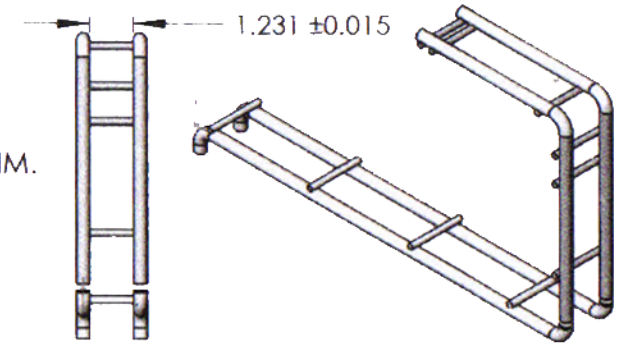

MULTI LEVEL BRACKETS

BRACKET SIZE	A- DIM.	B- DIM.	C- DIM.
6X8X15	6"	8"	15"
6X12X11	6"	12"	11"
6X4X19	6"	4"	19"

GENERAL NOTES:

A) MATERIAL
1) REGULAR GALVANIZED WIRE PER ASTM A641.
2) CARBON STEEL BRITE BASIC WIRE PER ASTM A510 GRADE 1008.

B) FINISH (CARBON STEEL WIRE ONLY)..

C) DIMENSIONAL TOLERANCES
1) GENERAL DIMENSIONS +/- 1/8" U.N.D.
2) LENGTH +/- 1/4"
3) WIDTH +/- 1/64"
4) DEPTH +/- 1/8"
5) ANGULAR FORMATION +/- 3 DEG.
6) CAMBER SHALL NOT EXCEED 1/2" ON STANDARD 10' LENGTH.
7) TWIST SHALL NOT EXCEED 1/2" ON STANDARD 10' LENGTH.

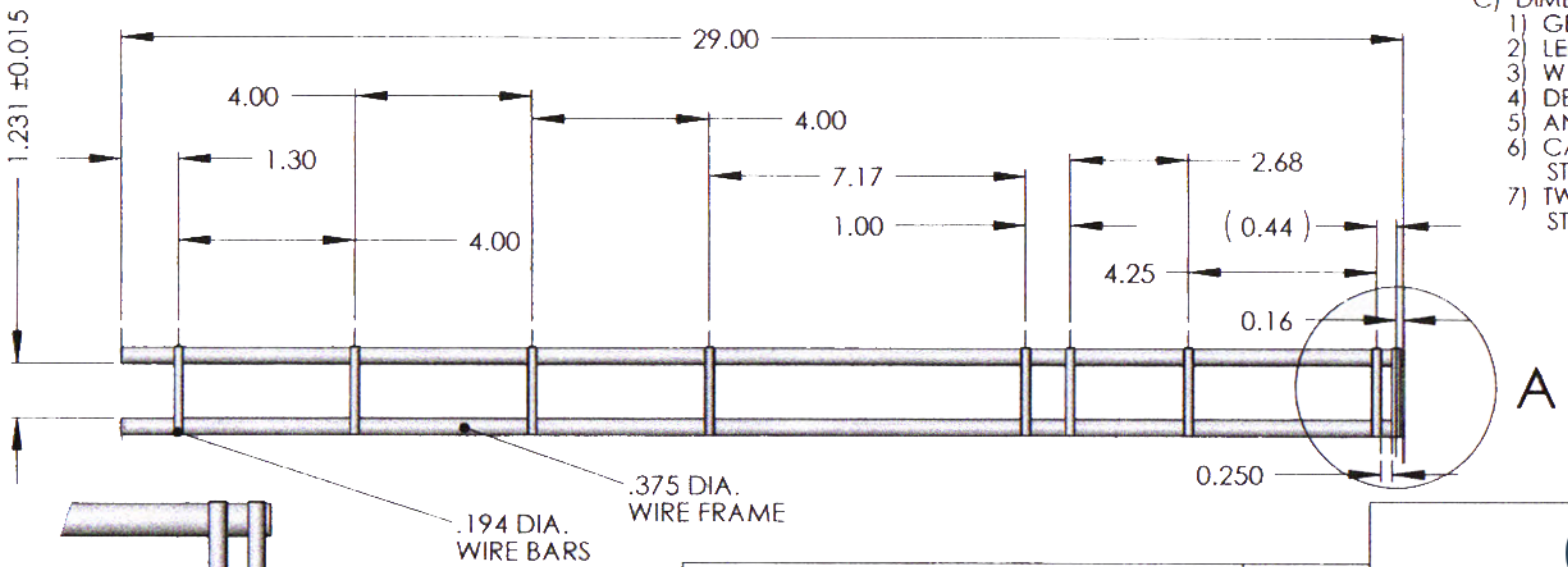

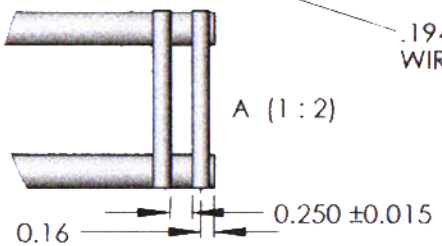

UNLESS OTHERWISE SPECIFIED:
DIMENSIONS ARE IN INCHES.

DEBUR AND BREAK SHARP EDGES

REVISION	NAME	CHANGE	DATE
A	AF		5-12-10

MATERIAL:

WEIGHT:

act
ACCESS CABLE TRAYS
A Product of IRVINE ACCESS FLOORS

TITLE:
MULTI-LEVEL-BRACKET

DWG NO.
AFML 4 - 8 - 12

SCALE:1:5

SHEET 1 OF 1